Cessna Citation CE-560

Note Taking Guide

+1.307.388.0026

Document Version 1.1
20 April 2017
© Aeromania, LLC 2017

Aeromania™

Aeromania LLC
CE 550 Note Taking Guide

Ver. 1.0	Original	3/15/2016
Ver 1.1	Cover & edits	4/20/2017

Table of Contents

Memory Items ……3

Takeoff Briefing ……6

Stall / Missed Approach ……6

Fuel ……7

Electrical ……8

Hydraulics ……9

Environmental ……10

Ice Protection ……11

Annunciator Panel ……12

PRACTICE ……13

Limitations ……17-20

You are not ready for the evaluation until you can fill in the blank PRACTICE pages from memory without any errors.

The systems schematics are to be used for taking notes in class.

Memory Items

Engine Failure or Fire or Master Warning During Takeoff

Speed below V1 – takeoff should normally be aborted.

1. Brakes - As Required.
2. Throttles - IDLE.
3. Speedbrakes - EXTEND.

Engine Failure or Fire During Takeoff

Speed above V1 – takeoff should normally be continued.

1. After establishing a positive rate of climb, RETRACT landing gear, climb at V2
2. At 400 feet, retract flaps at V2+10 and accelerate to VENR

Engine Failure During Coupled Approach

1. Power (operating engine) - INCREASE as Required
2. Rudder Trim - TRIM toward operating engine
2. Airspeed - VREF+10
3. Flaps - APPR

Engine FIRE

(Engine FIRE switch illuminated)

1. Throttle (affected engine) - IDLE.
   If the light remains on:
2. Engine FIRE Switch - LIFT COVER and PUSH.
3. Either illuminated BOTTLE ARMED light - PUSH.

Emergency Restart – Two Engines

1. SYNC - OFF
2. ECS Bleed - OFF
3. Boost Pumps - ON
4. Ignitions - ON & BOTH
5. Throttle Levers - IDLE

Electrical Fire or Smoke

1. Oxygen masks - ON & 100%
2. Oxygen MIC switches - As Required

Cabin Decompression

1. Oxygen masks - ON and 100%
2. EMERGENCY DESCENT - As Required
3. OXYGEN PRIORITY VALVE - Check NORMAL
4. Passenger Oxygen - ENSURE Passengers are receiving oxygen.
5. Oxygen Mic switches - MIC OXY MASK

Emergency Descent

1. Throttles - IDLE
2. Speedbrakes - EXTEND
3. Initiate Moderate Bank

Battery Overheat

1. Amp/Volt - Note
2. Battery Switch - EMER
3. Amp/Volt - Note Decrease

Autopilot Malfunction

1. Autopilot/trim disengage switch - PRESS.

TAWS WARNING (PULL UP)

1. AP TRIM DISC button - PRESS & Release
2. Aircraft Attitude - INITIATE CLIMB ATTITUDE
3. Power - MAXIMUM ALLOWABLE
4. Airspeed - V2

Inadvertent Stall or Buffet

1. AP TRIM DISC button - PRESS & Release
2. Pitch Attitude - REDUCE Angle of Attack / Lower Nose
3. MAXIMUM POWER
4. FLAPS - APPROACH
5. After recovered from stall - minimize altitude loss

Inadvertent Thrust Reverser Deployment During Takeoff
SPEED BELOW V1 - ABORT

1. Brakes - As Required
2. Throttles - IDLE
3. Speed Brakes - EXTEND
4. Thrust Reversers - DEPLOY Both

Inadvertent Thrust Reverser Deployment During Takeoff
SPEED ABOVE V1 – CONTINUE TAKEOFF

1. EMER STOW Switch (Affected Engine) - EMER
2. Positive rate of climb - RETRACT Landing Gear
DO NOT EXCEED 125 KIAS until T/R stows
3. At level off altitude - Retract flaps at V2+10 accelerate to VENR
DO NOT EXCEED 200 KIAS after T/R stows

Thrust Reverser Inadvertent In-Flight Deployment

1. Control wheel - GRIP
2. Autopilot - DISENGAGE
Airplane will tend to pitch up and roll into deployed T/R
3. EMER STOW Switch (Affected Engine) - EMER
4. Thrust lever (Affected Engine) - Check IDLE
5. Aispeed - REDUCE to <= 150 KIAS
DO NOT EXCEED 200 KIAS after T/R stows

Thrust Reverser UNLOCK Light ON In Flight

1. EMER STOW Switch (Affected Engine) - EMER
2. Thrust Reverser Levers - Check STOWED (Full Forward)

Takeoff Briefing

Memorize this briefing:

V1 is ___, V2 is ___, VENR is___, we need ___ feet of dry/wet RWY
If you see a need to abort prior to V1, say “ABORT-ABORT” and we’ll stop straight ahead.

After V1, say “CONTINUE” and tell me what you see. We’ll (remain VFR and land, continue the SID and hold, etc)

Calls will be “Power’s set, airspeed alive, cross-checked at 60, V1-Rotate, Positive Rate – I’ll command GEAR UP, V2+10, I’ll command FLAPS UP, YAW DAMPER ON, and we’ll delay the after takeoff checks until we’re talking to departure.

Stall / Missed Approach

Say the following words out loud and do each step in order for a single engine missed approach, a normal missed approach, or to recover from any stall.

Memorize the following:

MAX POWER, Flaps – APPROACH

Positive Rate – GEAR UP

Climb at V2

V2 plus 10 – FLAPS UP

Fuel

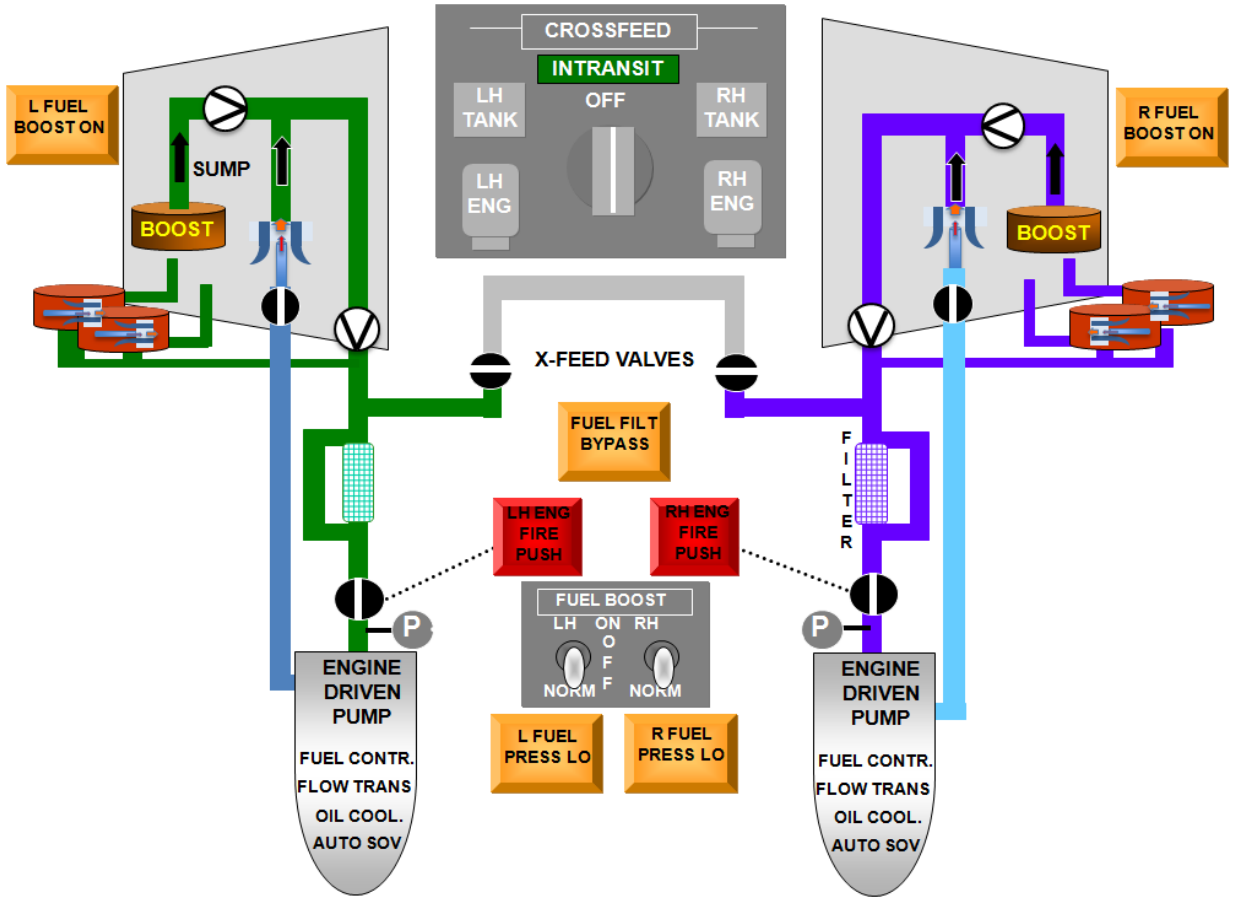
CROSSFEED
INTRANSIT
LH TANK
OFF
RH TANK
LH ENG
RH ENG
L FUEL BOOST ON
R FUEL BOOST ON
SUMP
BOOST
BOOST
X-FEED VALVES
FUEL FILT BYPASS
FILTER
LH ENG FIRE PUSH
RH ENG FIRE PUSH
FUEL BOOST
LH ON RH
OFF
NORM
NORM
P
P
ENGINE DRIVEN PUMP
FUEL CONTR.
FLOW TRANS
OIL COOL.
AUTO SOV
ENGINE DRIVEN PUMP
FUEL CONTR.
FLOW TRANS
OIL COOL.
AUTO SOV
L FUEL PRESS LO
R FUEL PRESS LO

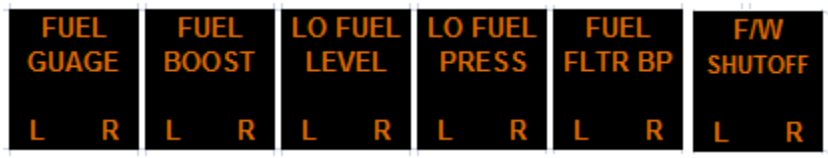
FUEL GUAGE
L R
FUEL BOOST
L R
LO FUEL LEVEL
L R
LO FUEL PRESS
L R
FUEL FLTR BP
L R
F/W SHUTOFF
L R

Electrical

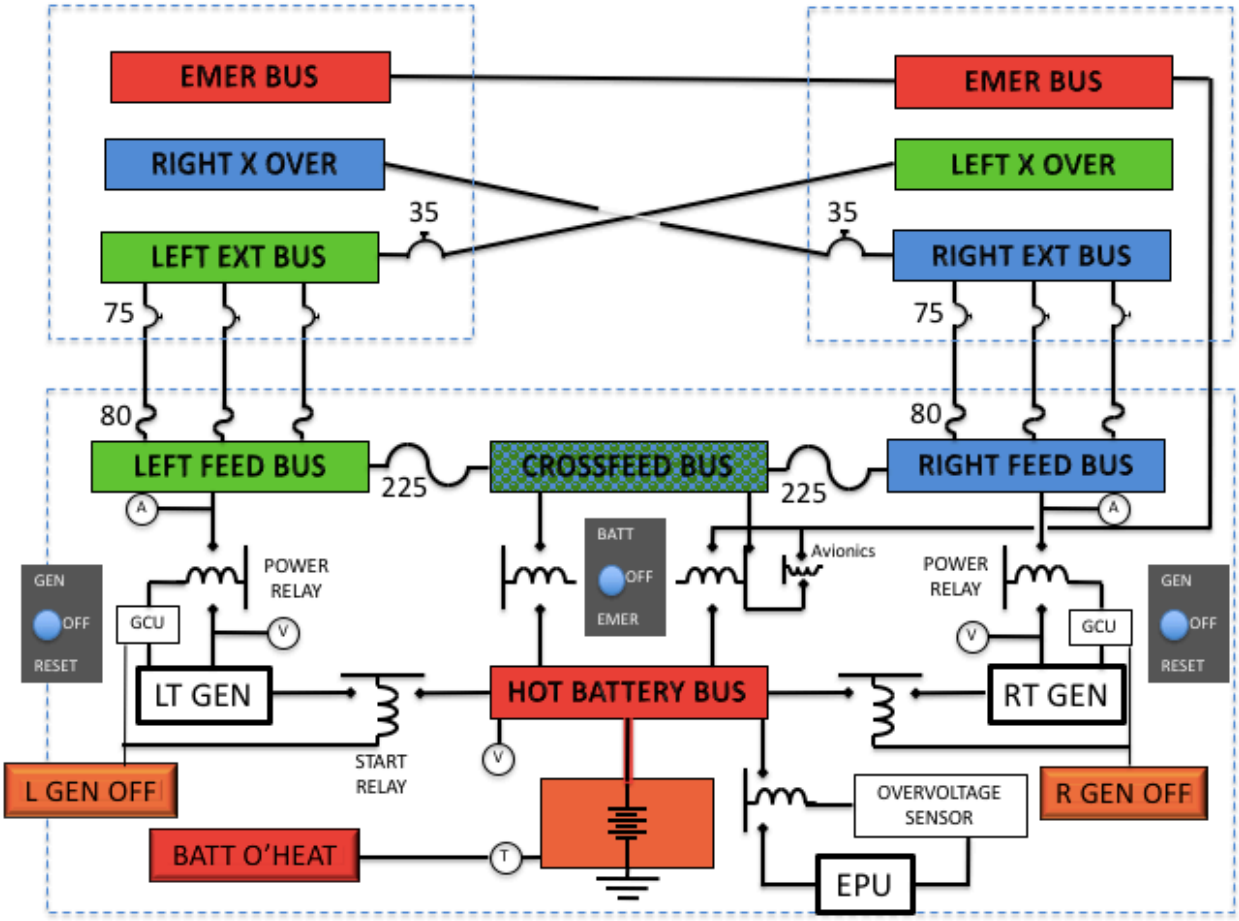
EMER BUS
EMER BUS
RIGHT X OVER
LEFT X OVER
35
35
LEFT EXT BUS
RIGHT EXT BUS
75
75
80
80
LEFT FEED BUS
225
CROSSFEED BUS
225
RIGHT FEED BUS
A
A
BATT
OFF
EMER
Avionics
GEN
OFF
RESET
POWER RELAY
POWER RELAY
GEN
OFF
RESET
GCU
GCU
V
V
LT GEN
HOT BATTERY BUS
RT GEN
START RELAY
V
L GEN OFF
R GEN OFF
OVERVOLTAGE SENSOR
BATT O'HEAT
T
EPU

BATT O'TEMP <160°
CAB ALT 10K FT AC FAIL
GEN OFF
L R
INVRTR FAIL
L R
F/W SHUTOFF
L R

Hydraulics

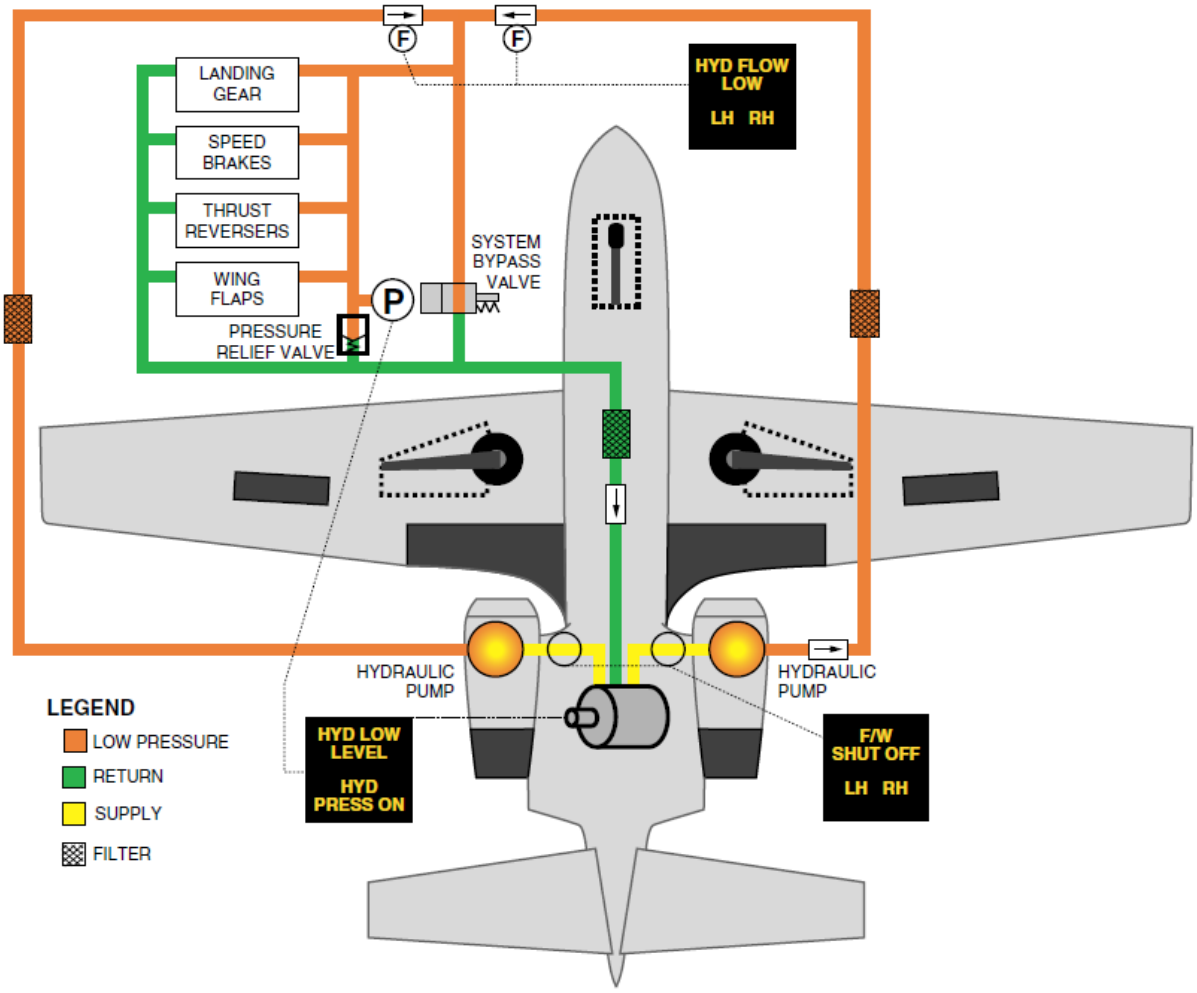
LANDING GEAR
SPEED BRAKES
THRUST REVERSERS
WING FLAPS
PRESSURE RELIEF VALVE
SYSTEM BYPASS VALVE
HYD FLOW LOW
LH RH
HYDRAULIC PUMP
HYDRAULIC PUMP
HYD LOW LEVEL
HYD PRESS ON
F/W SHUT OFF
LH RH
LEGEND
LOW PRESSURE
RETURN
SUPPLY
FILTER

Environmental

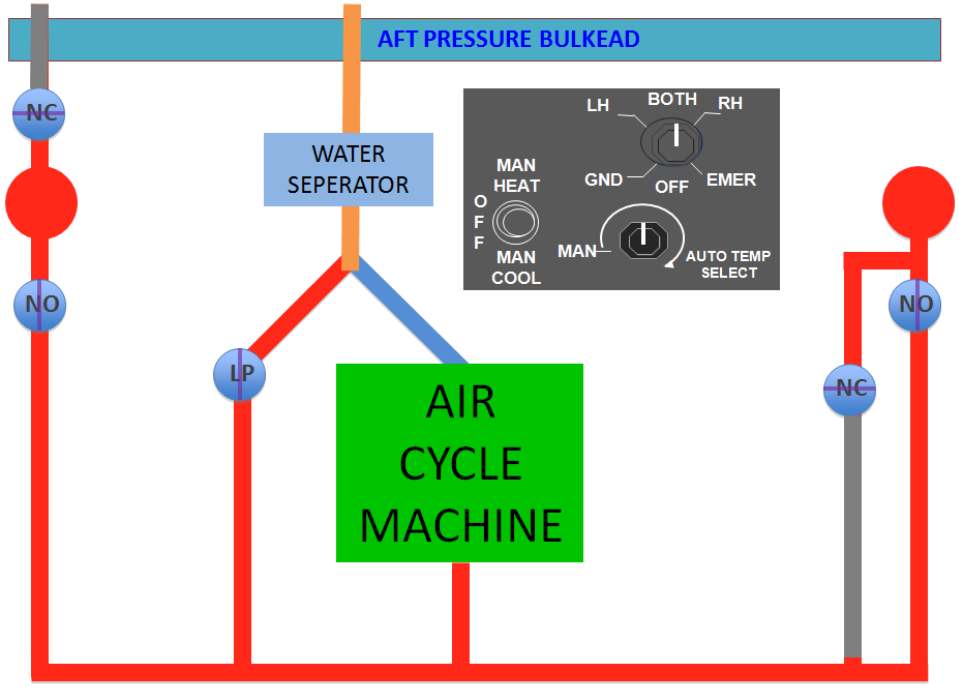

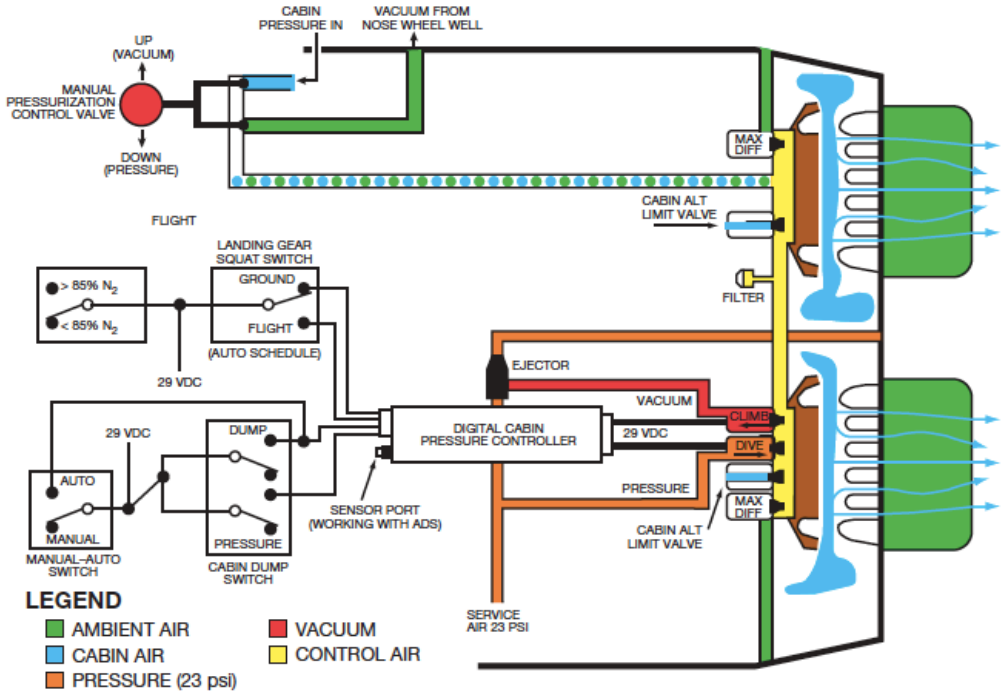

Ice Protection

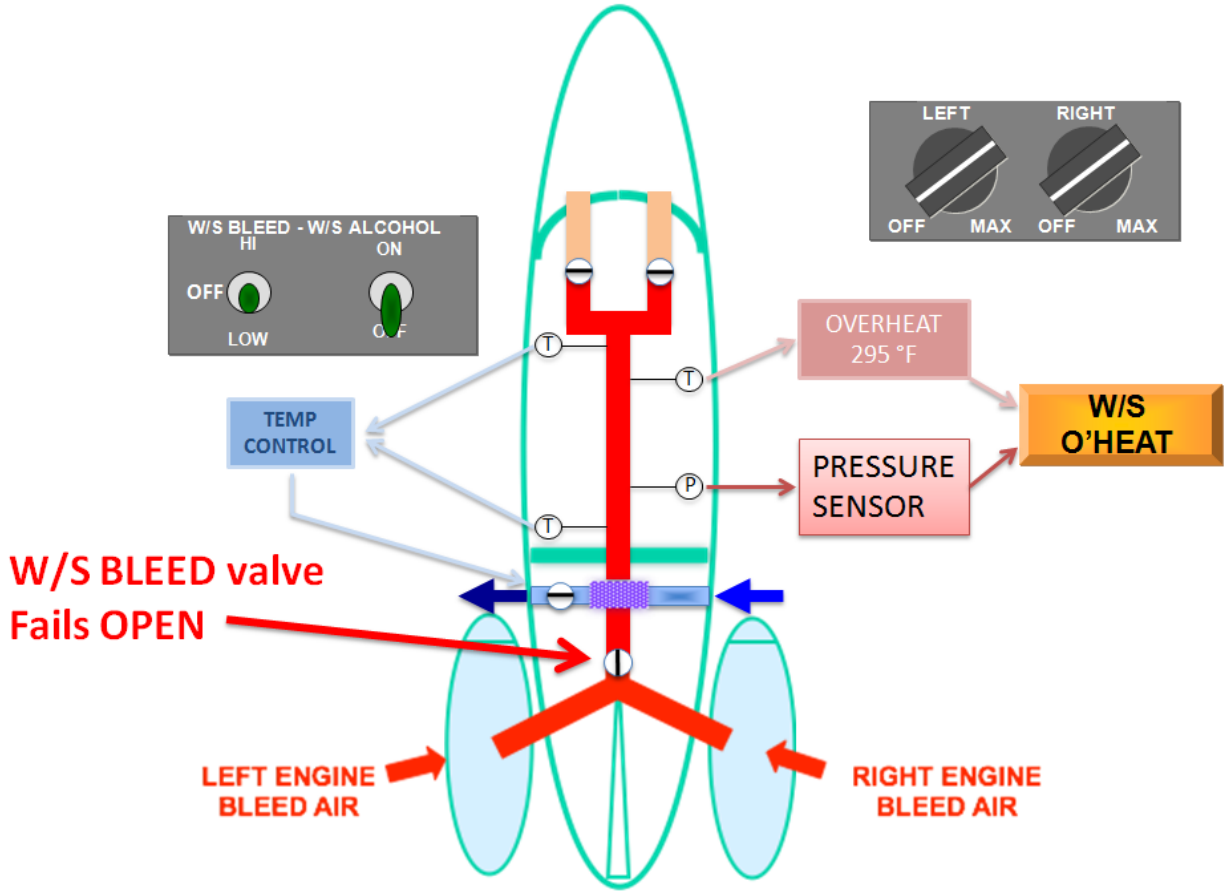

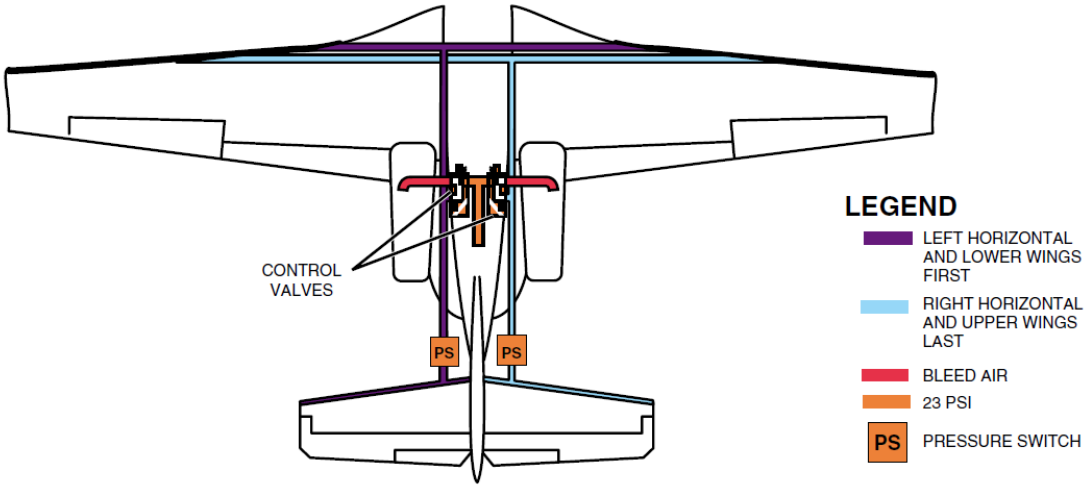

STBY P/S HTR AOA HTR FAIL	P/S HTR L R	ENG ANTIICE L R	WS AIR O'HEAT SURFACE DEICE	AIR DUCT O'HEAT ACM O'PRESS

ANNUNCIATOR PANEL

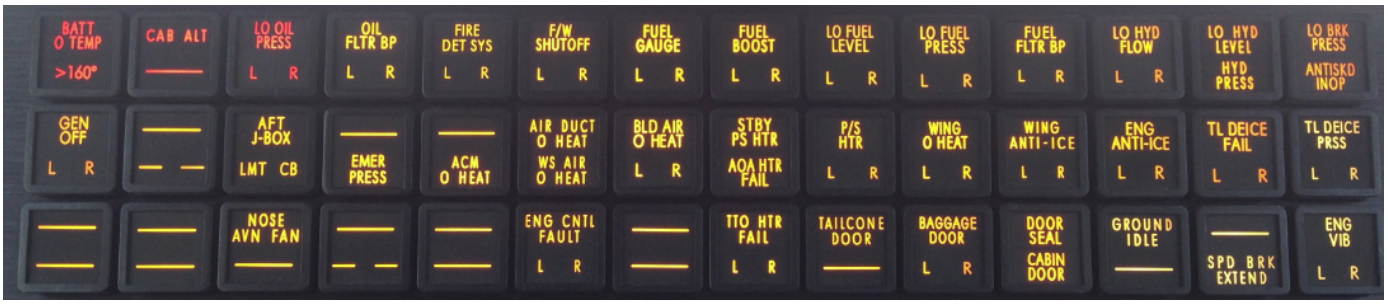

Practice Memory Items

Engine Failure or Fire or Master Warning During Takeoff

Speed below V1 – takeoff should normally be aborted.

1
2
3

Engine Failure or Fire During Takeoff

Speed above V1 – takeoff should normally be continued.

1
2

Engine Failure During Coupled Approach

Speed above V1 – takeoff should normally be continued.

1
2
3
4

Engine FIRE

(Engine FIRE switch illuminated)

1
IF
2
3

Emergency Restart – Two Engines

1
2
3
4
5

Electrical Fire or Smoke

1
2

Cabin Decompression

1
2
3
4
5

Emergency Descent

1
2
3

Battery Overheat

1
2
3

Autopilot Malfunction

1

TAWS WARNING (PULL UP)

1
2
3
4

Inadvertent Stall or Buffet

1
2
3
4
5

Inadvertent Thrust Reverser Deployment During Takeoff *SPEED BELOW V1 - ABORT*

1
2
3
4

Inadvertent Thrust Reverser Deployment During Takeoff
SPEED ABOVE V1 – CONTINUE TAKEOFF

1
2
DO NOT
3
DO NOT

Thrust Reverser Inadvertent In-Flight Deployment

1
2
Airplane
3
4
5
DO NOT

Thrust Reverser UNLOCK Light ON In Flight

1
2

Practice Takeoff Briefing

_____

_____

_____

_____

_____

_____

_____

_____

_____

Practice Stall / Missed Approach

_____

_____

_____

_____

_____

CE-560 Limitations, SN 1-259

Weights, lbs

Ramp	16,100
Takeoff	15,900
Landing	15,200
Zero Fuel	11,200
Opt. ZFW	12,200
Baggage, Nose	350
Baggage, Aft	500
Baggage, Tail	600
BEW, Typical	9,700

Speeds, kts

V_{MO} to 14,000	261
V_{MO} 14 to FL280	292
V_{MO} heavy ZFW to FL305	276
M_{MO}	.755
V_A 7500 lbs @ SL	151
15,900 lbs @ FL314	275
Turbulent Air	180
Flaps 7 & 15	200
Flaps 35 (Land)	173
Gear V_{LO} (cxtend)	250
V_{LO} (retract)	200
V_{LE} (extended)	V_{MO}/M_{MO}
V_{MCG}	86
V_{MCA}	85
Tire Ground (Mains)	165
Autopilot	V_{MO}/M_{MO}

Takeoff, Landing, Ground

Max Altitude	14,000
Water or Slush	.5”
Max Tailwind	10 knots
Starter	3 Starts in 30 min.
Generator	125 gnd, 225 flt. idle
Battery (NICAD)	3 starts/hr
Tire pressure,	Nose 120+/- 5
	Mains 130+/-5
Pitot heat on ground	2 min.

Enroute

Max Altitude	FL450
Max Temp	ISA + 39C
Generator Load to FL350	300 amps
above FL350	225 amps
Min Autopilot,GS coupled	95ft AGL

Powerplant

JT1D-5A

N1	104.0 %
N2	94 %
ITT (Normal Start)	550°C
ITT Take-Off (5 min)	700°C
ITT Climb	680°C
ITT Cruise	670°C
ITT Idle	580°C
Thrust (ISA, TO, 5 min)	2900#
Bypass Ratio	2.1 to 1
TBO	3500 hours

Fuel

Quantity	5800#
Fuel Level Low	185#
Fuel Press Low	5 psi decreasing
Imbalance intentional	200#
Imbalance emergency	600#

Environmental

Max Design Cabin Alt.	8000’
Cabin Altitude Warning	10,000’
Altitude Limiters (+/-1500)	13,000’
Masks Auto-Drop (+/-600)	13,500’
Max Cabin Differential	8.9 psi

CE-560 Ultra

Weights, lbs

Ramp	16,500
Takeoff	16,300
Landing	15,200
Zero Fuel	12,200
Baggage, Nose	350
Baggage, Aft	500
Baggage, Tail	600
BEW, Typical	10,000

Speeds, kts

V_{MO} to 8,000	262
V_{MO} 8 to FL289	292
M_{MO}	.755
V_A 7500 lbs @ SL	151
15,900 lbs @ FL314	275
Turbulent Air	180
Flaps 7 & 15	200
Flaps 35 (Land)	173
Gear V_{LO} (cxtend)	250
V_{LO} (retract)	200
V_{LE} (extended)	V_{MO}/M_{MO}
V_{MCG}	91
V_{MCA}	95
Tire Ground (Mains)	165
Autopilot	V_{MO}/M_{MO}

Takeoff, Landing, Ground

Max Altitude	14,000
Water or Slush	.5”
Max Tailwind	10 knots
Max Temperature	ISA+39°C
Min Temperature	-54°C
Starter	3 Starts in 30 min.
Generator	125 gnd, 225 flt. idle
Battery (NICAD)	3 starts/hr
Tire pressure,	Nose 120+/- 5
	Mains 130+/-5
Pitot heat on ground	2 min.

Limitations SN 260-538

Enroute

Max Altitude	FL450
Max Temp	ISA + 39C
Generator Load to FL350	300 amps
above FL350	225 amps
Min Autopilot enroute	1000’ AGL
VNAV	500’ AGL
non-precision	300’ AGL
precision	180’ AGL

Powerplant

JT1D-5D

N1	100.0 %
N2	97 %
ITT (Normal Start)	550°C
ITT Take-Off (5 min)	720°C
ITT Climb	700°C
ITT Cruise	670°C
ITT Idle	580°C
Thrust (ISA, TO, 5 min)	3040#
Bypass Ratio	2.1 to 1
TBO	3500 hours

Fuel

Quantity	5800#
Fuel Level Low	185#
Fuel Press Low	5 psi decreasing
Imbalance intentional	200#
Imbalance emergency	600#

Environmental

Max Design Cabin Alt.	8000’
Cabin Altitude Warning	10,000’
Altitude Limiters (+/-1500)	13,000’
Masks Auto-Drop (+/-600)	13,500’
Max Cabin Differential	8.9 psi

CE-560 Encore

Weights, lbs

Ramp	16,830
Takeoff	16,630
Landing	15,200
Zero Fuel	12,600
Baggage, Nose	350
Baggage, Aft	500
Baggage, Tail	600
BEW, Typical	10,000

Speeds, kts

V_{MO} to 8,000	262
V_{MO} 8 to FL289	292
M_{MO}	.755
V_A 10,500 lbs @ SL	154
16,630 lbs @ FL314	275
Turbulent Air	180
Flaps 7 & 15	200
Flaps 35 (Land)	173
Gear V_{LO} (cxtend)	250
V_{LO} (retract)	200
V_{LE} (extended)	250
V_{MCG}	91
V_{MCA}	95
Tire Ground (Mains)	165
Autopilot	V_{MO}/M_{MO}

Takeoff, Landing, Ground

Max Altitude	10,000
Water or Slush	.5”
Max Tailwind	10 knots
Max Temperature	ISA+39ºC
Min Temperature	-54ºC
Starter	3 Starts in 30 min.
Generator	125 lo idle, 225 hi idle
Battery (NICAD)	3 starts/hr
Tire pressure,	Nose 120+/- 5
	Mains 130+/-5
Pitot heat on ground	2 min.

Limitations SN 539-750

Enroute

Max Altitude	FL450
Max Temp	ISA + 39C
Generator Load to FL350	300 amps
Min Autopilot enroute	1000’ AGL
non-precision	300’ AGL
precision	180’ AGL

Powerplant

PW535A

N1	100.0 %
N2	100.0 %
ITT (Normal Start)	690ºC
ITT Take-Off (5 min)	700ºC
ITT Continuous	700ºC
Thrust (ISA, TO, 5 min)	3400#
Bypass Ratio	3.5 to 1
TBO	4000 hours

Fuel

Quantity	5440#
Fuel Level Low	180#
Fuel Press Low	5 psi decreasing
Imbalance intentional	200#
Imbalance emergency	600#

Environmental

Max Design Cabin Alt.	8000’
Cabin Altitude Warning	10,000’
Altitude Limiters (+/-500)	14,500’
Masks Auto-Drop (+/-500)	14,500’
Auto EMER PRESS	14,500’
Max Cabin Differential	8.9 psi

CE-560 Encore+ Limitations SN 751 on

Weights, lbs

Ramp	17,030
Takeoff	16,830
Landing	15,200
Zero Fuel	12,850
Baggage, Nose	310
Baggage, Aft	500
Baggage, Tail	600
BEW, Typical	10,000

Speeds, kts

V_{MO} to 8,000	262
V_{MO} 8 to FL289	292
M_{MO}	.755
V_A 10,500 lbs @ SL	154
16,630 lbs @ FL314	275
Turbulent Air	180
Flaps 7 & 15	200
Flaps 35 (Land)	173
Gear V_{LO} (cxtend)	250
V_{LO} (retract)	200
V_{LE} (extended)	250
V_{MCG}	91
V_{MCA}	95
Tire Ground (Mains)	165
Autopilot	V_{MO}/M_{MO}

Takeoff, Landing, Ground

Max Altitude	14,000
Water or Slush	.5”
Max Tailwind	10 knots
Max Temperature	ISA+39ºC
Min Temperature	-54ºC
Starter	3 Starts in 30 min.
Generator	125 lo idle, 225 hi idle
Battery (NICAD)	3 starts/hr
Tire pressure,	Nose 120+/- 5
	Mains 130+/-5
Pitot heat on ground	2 min.

Enroute

Max Altitude	FL450
Max Temp	ISA + 39C
Generator Load to FL350	300 amps
Min Autopilot enroute	1000’ AGL
non-precision	200’ AGL
precision Cat 1	90’ AGL
after TO or GA	300’ AGL

Powerplant

PW535B

N1	100.0 %
N2	100.0 %
ITT (Normal Start)	690ºC
ITT Take-Off (5 min)	700ºC
ITT Continuous	700ºC
Thrust (ISA, TO, 5 min)	3400#
Bypass Ratio	3.5 to 1
TBO with HSI	5000 hours

Fuel

Quantity	5440#
Fuel Level Low	180#
Fuel Press Low	5 psi decreasing
Imbalance intentional	200#
Imbalance emergency	600#

Environmental

Max Design Cabin Alt.	8000’
Cabin Altitude Warning	10,000’
Altitude Limiters (+/-500)	14,500’
Masks Auto-Drop (+/-500)	14,500’
Auto EMER PRESS	14,500’
Max Cabin Differential	8.9 psi